Istraživanja i projektovanja za privredu
ISSN 1451-4117
DOI:10.5937/jaes0-46855
www.engineeringscience.rs

iipp publishing

Journal of Applied Engineering Science
Vol. 22, No. 2, 2024
Original Scientific Paper
Paper number: xx(xxxx)x, xxxx, xxx-xxx

DEVELOPMENT OF FRICTION STIR WELDING TOOL FOR HIGH-DENSITY POLY-ETHYLENE (HDPE)–CASE STUDY: FIBERGLASS COMPOSITE MATERIAL

Dodi Sofian Arief[1,4], Basuki Wirjosentono[2]*, Jaswar Koto[3], M Dalil[4], Anita Susilawati[4]

[1] *Mechanical Engineering Department, Universitas Sumatera Utara, Medan, Indonesia*
[2] *Chemistry Department, Universitas Sumatera Utara, Medan, Indonesia*
[3] *Mechanical Engineering Department, Universitas Pembangunan Nasional Veteran, Jakarta, Indonesia*
[4] *Mechanical Engineering Department, Universitas Riau, Pekanbaru, Indonesia*
** basuki@usu.ac.id*

This study aims to develop an effective Friction Stir Welding (FSW) method for composite material of High-Density Poly-Ethylene (HDPE) Pipes. The development of welding tool, there was the addition of an external heating source on the shoulder and probe/pin to overcome the problem of lack of heat resulting from friction between the tool and the material to be welded. The case study was conducted to join the short fiberglass-HDPE composite with a type of ratio of 30% by weight of short fibre and 70% by weight of HDPE, which optimizing parameters such as rotating speed, welding speed, and preheating temperature. The FSW joining process for short fiberglass-HDPE composite sheets was carried out using a Fanuc Series 21i-M CNC milling machine as the driving tool with rotational speed (ω) varied in 3 conditions, namely 600 rpm, 800 rpm and 1000 rpm, and welding speed (v) or feeding at 5 mm/minutes and 10 mm/minutes. The temperature was controlled according to the liquid point of High-Density Poly-Ethylene, which was 130oC, and raised to 150oC and 170oC. The 12 pieces of thermocouple were used along the track on the material and jig plates at the top, middle and bottom. Then, the results of joining the sheets were made in the form of specimens with sizes according to ASTM 3039. The tensile tests of the specimens were carried out at a rate of 0.01 mm/s. The results showed the highest tensile strength was an average value of 24.52 MPa at a rotational speed of 800 rpm, the feeding of 5 mm/min and the temperature of 130oC. The lowest tensile strength was an average value of 17.54 MPa at a temperature of 170°C with a speed of 600 rpm.

Keywords: Friction Stir Welding (FSW), composite materials, High-Density Poly-Ethylene (HDPE), fiberglass

1 INTRODUCTION

The FSW has been widely applied for joining aluminium alloys, titanium alloys and other materials that are difficult to perform by fusion welding. Recent scientific study indicates that FSW can include thermoplastic polyethylene and composites made from polymer matrix materials [1]. Polymer materials and composites made from polymer matrix have high particular strength, outstanding resistance to corrosion, outstanding design freedom, as well as processing ability, allowing for cost savings and enhanced manufacturing productivity while bringing minimal impact on the environment in many areas industry such as the automobile, aerospace, and technological industries [2,3].

The FSW method consists of three processes: (a) the formation of a layer of liquid material on the surfaces to be joined, (b) the formation of bonds by setting up, and (c) the liquid material cools, and the stage pressure must be maintained to prevent voids from forming within the weld zone [4]. The FSW has advantages such as short processing time, relatively low tool/machine consumption costs, can be applied at low temperatures, fast plastic deformation and high joint quality [5]. The FSW of polymers with thermoplastic properties are not a process that uses solids because polymers are made up of molecules with varying chain lengths and have a melting range rather than a specific melting point [6]. When FSW is applied to polymers, some of the shorter chains may exceed the point of melting while those with longer chains remain solid. Clark et al. [7] created the FSW welding tool for thermoplastic polymer materials. FSW has achieved some success in incorporating thermoplastic plastics and matrices of polymers materials made of composites such as Polyethylene Ethylene (PE) [8], Polyethylene Propylene (PP) [9], Polyethylene Carbonates (PC) [10], the thermoplastic polymer Acrylonitrile Butadiene [11], and 20% carbon fibre reinforced PP composite [12].

The primary elements influencing the formation of joints and quality throughout FSW of thermoplastic polyethylene and composites made from polymers can be classified as three main groups: machine the variables, welding tool parameters, and material attributes [13]. The configuration and settings of the welding equipment and tool are heavily influenced by the mechanical characteristics of the material being welded, such as strength of yield, ductility, and hardness, which all have a substantial impact on plastic deformation [13]. A higher melting point or a constant pressure specific temperature material necessitates a high heat input, whereas a low melt point or constant compression specific heat material necessitates a relatively low heat input [14]. Thermal characteristics of materials have a substantial impact on peak welding temperatures as well as heat transfer for components with a high degree of thermal conductivity, which can easily result in a considerable amount of heat transfer [15]. Therefore, a higher heat input is also required to produce material coalescing.

The amount of thermal energy input during FSW is controlled by machine variables such as the rotation speed and welding speed, which impacts the characteristics of the adhesives and the final properties. Under the assumption

that there is sufficient heat transfer to soften the material, the lower the level of amount of heat applied, the lesser the crystal structure, and vice versa. High rotating speeds generate a great quantity of heat, but low welding speeds prolong exposure to high temperatures, and vice versa. Furthermore, the depth and inclination of inclination have connections to the interaction region and extra plastic substance between the shoulder joint and the object being worked on, which influences polymer bonding quality.

The geometric characteristics of the welding machine mainly consist of shoulder and pin diameters, shoulder and pin features, pin shape, and pin length [5,6]. Welding tool consisting of a shoulder and pin plays a primordial role in the FSW process; some modifications are required to get the right FSW tool solution for welding polymers. Since polymers behave differently from metallic materials in the FSW process, developing new tools is necessary to minimize defects to achieve good welds. The main features of geometry tools include shoulder diameter, shoulder features, pin/probe shapes, pin/probe sizes, and pin/probe features. Polymer flow in the processing zone is influenced by tool geometry, welding motion, and tool rotation [16,17]. Tool geometry is an essential aspect of FSW as it influences heat generation, material flow, and the resulting microstructure [5]. Fig. 1 shows the standard tool geometry for the FSW tool. In most cases, the tool shoulder with the concave profile serves as the outlet volume or reservoir to move the polymer material away from the pin / probe. The angle of the bevel is necessary to keep a material reservoir underneath the tool and to allow the end edge of the shoulder to extrude the processing material.A tilt angle of 1°-3° is required for effective material processing. Shoulders are responsible for generating heat. Using large-diameter shoulders causes high heat generation and increased material flow, while smaller diameters form defects in the joint material [14,18].

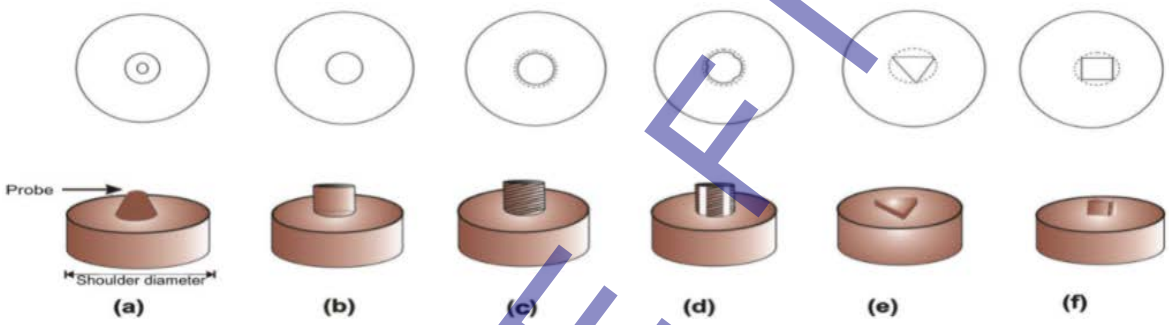

Fig. 1. Probe /Pin profile of the FSW tool [6]

Various probe geometries such as conical round bottom, columnar, threaded columnar, threaded columnar with flutes, triangular and square have been adopted for joining the polymer surfaces as shown in Fig. 1 [6]. Probe profiles such as: threaded cylindrical, square and triangular have been used more widely. The outer surface of the probe can also have different shapes and features including threaded, flat or other [6].

The FSW jointing selection provides solutions for joining HDPE Composite sheets having a linear joint path and connecting HDPE composite pipes with a rotary connecting path. This welding technology has the potential to significantly increase the productivity of fabrication welding processes, particularly for sections that are thicker than 10 mm (0.39 in). It is capable of continuous welding, and can be welded on almost any type of thermoplastic. Additionally, the design of the joint is straightforward, and the welding process is virtually dust-free, with no need to clean the joint surface; and most importantly, the process is automated, resulting in better quality and reduced weld failures [2,19-22]. The characteristics of a good FSW process connection can be considered with three parameter categories, namely: machine parameters, welding tool parameters and material properties by optimizing all three based on the application [13]. A limitation of the current FSW process is that it has only been proven to produce linear weld passes, and is not currently commercially available for material of the HDPE pipes.

The High-Density Poly-Ethylene (HDPE) is a thermoplastic material made from atoms of hydrogen and carbon to form high molecular weight products, which has excellent biocompatibility, stiffness, strength, and good creep properties [32-34]. In HDPE, the molecular chains will not collide with each other and the plastic will melt with the application of a sufficient amount of heat, resulting in a thermoplastic resin being formed. Based on its mechanical properties, HDPE is a non-linear viscoelastic material with time-dependent properties. The friction stir welding process requires material temperature stability, so that the heat conductivity of the HDPE material in the process of softening the material near the pin can be resolved. Therefore, this paper aims to develop the welding tool of a shoulder and pin for composite material of High-Density Poly-Ethylene (HDPE) Pipes.

2 METHOD

This study adopts the experimental method to develop and investigate the performance of the FSW process for composite material of High-Density Poly-Ethylene (HDPE) Pipes. The case study was conducted for joining the short fibreglass-HDPE composites, details of the materials are shown in table 1.

Table 1. Short Fiberglass and HDPE materials used in making composites [29],[30],[31]

	High-Density Poly-Ethylene (HDPE)	ShortFiberglass
Density	0.94 g/cm^3	2.58 g/cm^3
Thermal Conductivity	0.52 W/mK	0.045 W/mK
Dimension	Diameter ± 4.9 mm (granules)	± 5 mm(3B Chopped Strand)
Melting Point	120-130°C	700-1000°C
Friction Coefficient	0.2-0.4	0.2-0.6
Produced/ Distibuted/ commercialized by	PT. Chandra Asri Petrochemical Medan, Indonesia	PT. Juntus Kimiaraya Jakarta, Indonesia

The friction stir welding machine variables were selected on the Fanuc series 21i-M CNC milling machine in the Mechanical Engineering Production Laboratory, University of Riau and then modified to suit research needs. Various machining aspects were carefully considered to ensure the formation of quality welded joints. These aspects included the rotational speed (ω) of the welding tool, welding speed (v) or feeding, the angle of inclination of the tool, and the welding depth. The selection of variable variations in these machine aspects was based on literature studies regarding polymer splicing [22,24-27]. In this case, variations in rotational speed (ω) of the welding tools used 600 rpm, 800 rpm, and 1000 rpm. As for variations in welding speed (v) or feeding, 5 mm/minute and 10 mm/minute. The tool's tilt angle was done in only one normal position. The welding depth was adjusted to the thickness of the material sample sheet with a size of 10 mm. The developed weld tool of FSW was provided the external heat source with a temperature of 130ºC, 150ºC and 170ºC.

Fig. 2. Fanuc series 21i-M CNC milling machine

In the initial stages, the FSW tools have been designed and manufactured. The welding tool was tested under conditions appropriate to the polymer and polymer composite materials to be welded. The test involves monitoring the temperature, rotating speed, and welding speed applied during welding. To measure the temperature for heat transfer during the FSW joining process, 12 pieces of thermocouple were used along the track on the material and jig plates at the top, middle and bottom.

The steps for the FSW joining process with the design tool for the composite material of HDPE sheets were as follows:

- The composite material of HDPE sheet was placed and locked on the jig plate and attached to the table of the CNC milling machine (Fig. 3).
- The weld tool with the heating element was installed to attach to the CNC milling machine (Fig. 4).

The thermocouple sensor was attached to the heating element section. The temperature controller was used to regulate the temperature output of the desired heating element (Fig. 5).

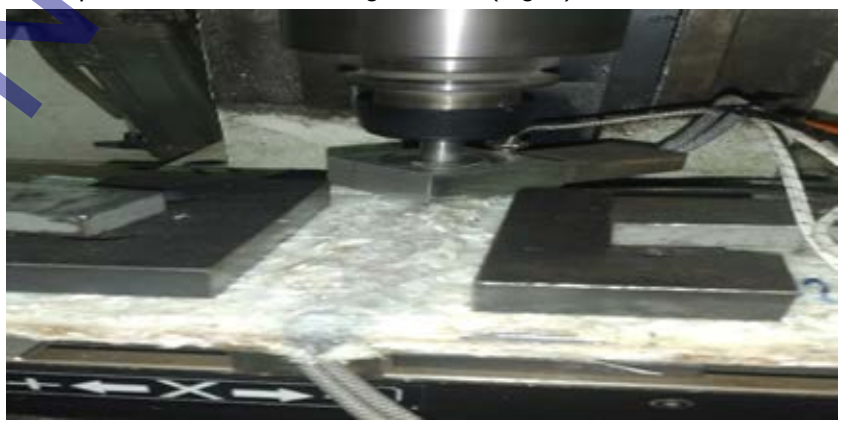

Fig. 3. Installation of short fiberglass-HDPE composite sheet on CNC milling machine table

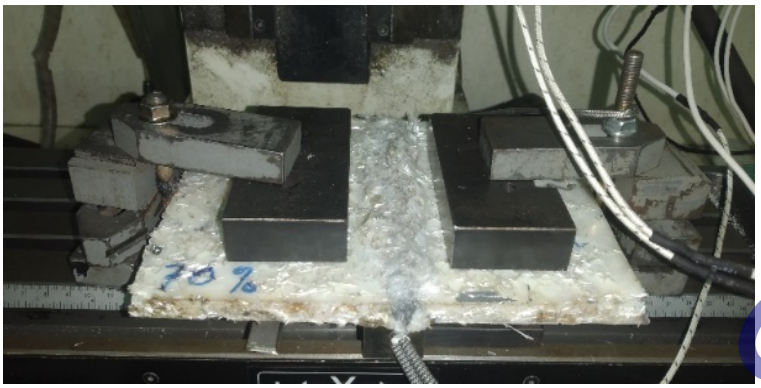

Fig. 4. Installation of proposed weld tool to CNC milling machine

Fig. 5. Use of thermocouple sensors and temperature controllers in the appliance

- Determination of the working temperature of connection based on the melting point for the HDPE material ranges from 120-130°C. The working temperature varied above the melting point was 130°C, 150°C and 170°C. The rotational speed (ω) of welding equipment was varied in 3 conditions for 600 rpm, 800 rpm and 1000 rpm. As for the welding speed (v) or feeding used in 2 conditions of variation for 5 mm/min and 10 mm/min.
- The temperature of the heating element was reached according to the desired variation. The CNC milling machine performs the setting (depth of cut) movement by bringing the short fiberglass-HDPE composite sheet closer to the tool and performing the dwell time process by rotating the tool. After the tool reaches the desired depth, operate the CNC milling machine by welding with the desired speed. The FSW process was carried out until the end of the short fiberglass-HDPE composite sheet to be joined. The connected short fiberglass-HDPE composite sheet was waited until room temperature, which was then removed from the jig plate and moved. The short fiberglass-HDPE composite sheet was identified as the specimen's name for further testing.

The testing process for the results of the FSW connection in the form of short fiberglass-HDPE composites were carried out by starting the stages of making tensile test specimens. Finally, the results of the FSW connection specimens were carried out the tensile strength test at a rate of 0.01 mm/s. The flowchart for research conducted, it can be seen in Fig. 6.

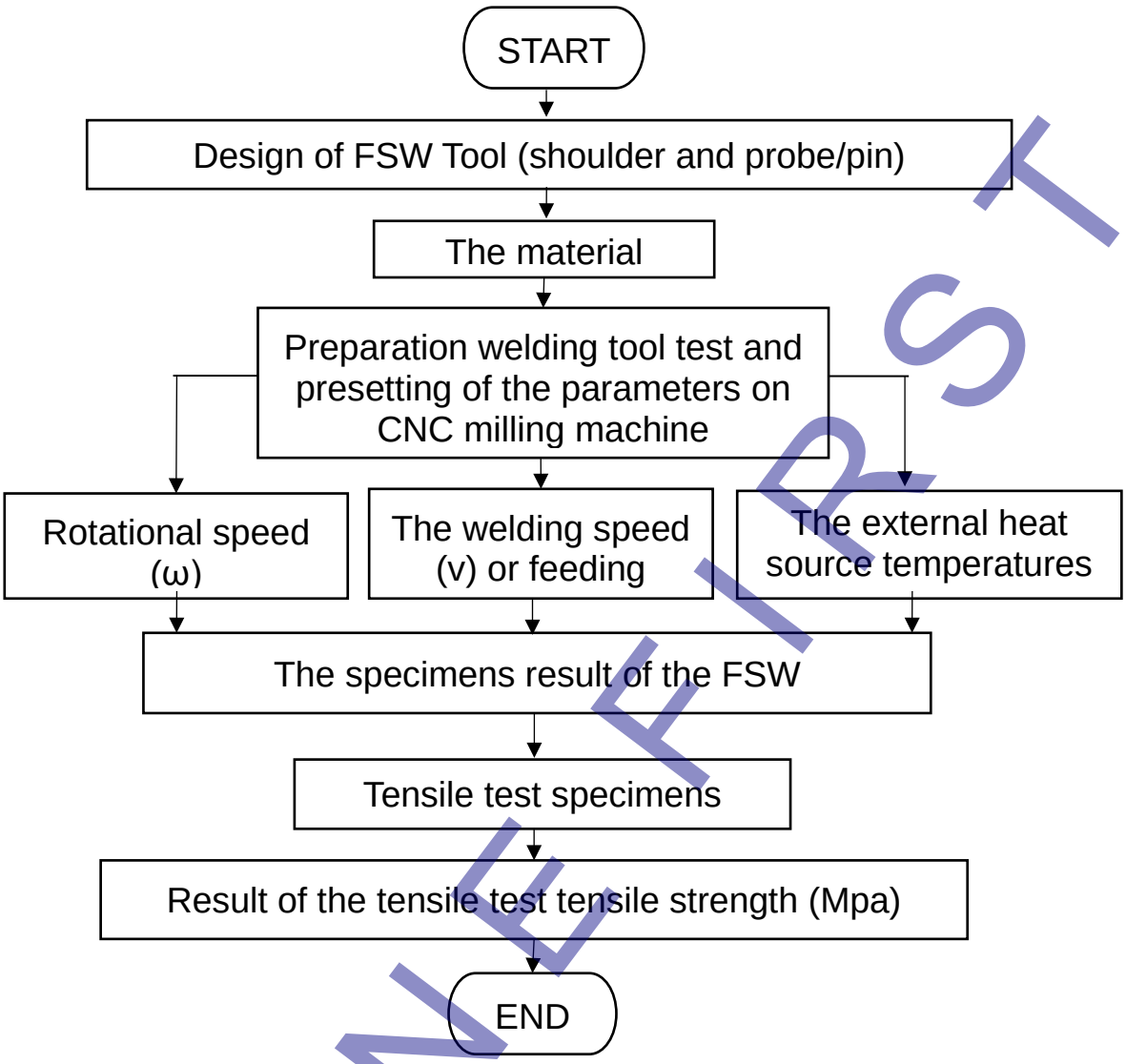

Fig. 6. The flowchart of research

3 RESULT AND DISCUSSION

3.1 Design of FSW Tool

Conventional welding tools test various shoulder diameters and probe/pin geometries. The FSW tool most commonly used for welding metallic materials consists of a rotating probe/pin connected to a larger diameter shoulder. In this case, the shoulder has a significant role in generating heat due to friction between the shoulder and the upper surface of the material to be welded. Preliminary tests were conducted using a conventional rotating shoulder design with different diameters. Therefore, it was concluded that there are better solutions than the rotating shoulder design concept for welding polymer and polymer composite materials. The resulting welded joints have very rough surfaces and flash and root defects occur along the weld regardless of welding parameters and tool geometry [25,26].

The conventional welding tool produces poor frictional heat between the steel material of the welding tool and the polymer material to be joined due to the need for a low feeding to achieve the melting temperature of the polymer material. The friction process in conventional welding takes a long time, and reaching the required melting temperature for the polymer becomes difficult. In addition, the friction between the polymer also did not produce optimal heat, causing the FSW (Friction Stir Welding) process on the polymer to take longer and even be challenging to do.

The development of welding tools (conventional) to the proposed design of FSW tool systems for polymer and polymer composite materials can be seen in Fig 7. In the design of the proposed welding tool, there was the addition of an external heating source on the shoulder and probe/pin to overcome the problem of lack of heat resulting from friction between the tool and the material to be welded. This design combines the concepts of external heating and the FSW process, allowing an external heat source to provide the initial heat required in the welding process. This approach can improve the efficiency and speed of joining polymer materials, even for composite polymer materials. The construction of the FSW tool is shown in Fig. 8.

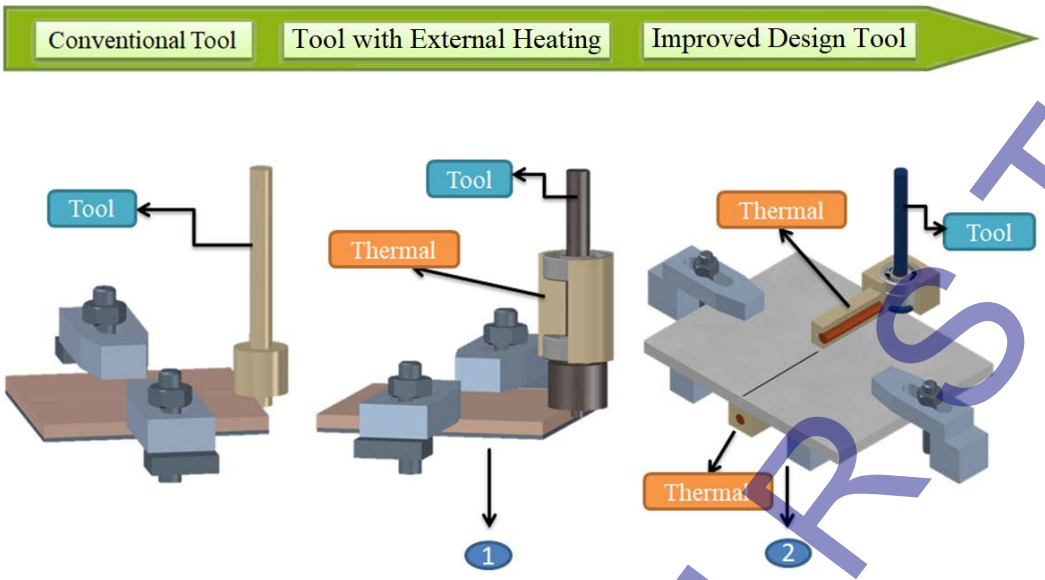

Fig. 7. Development of modifications to welding tools of FSW

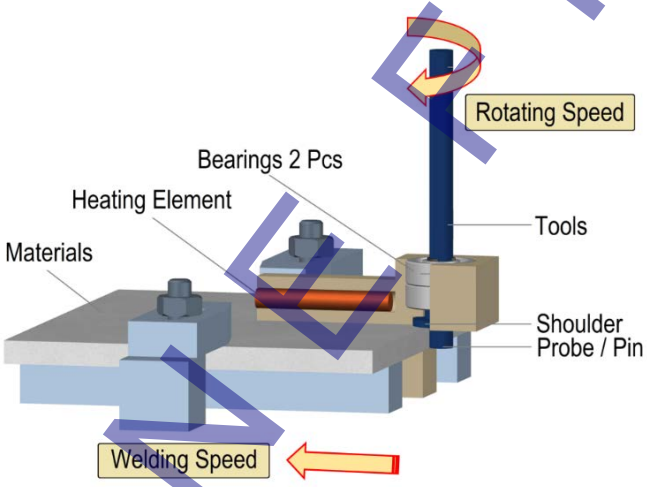

Fig. 8. The design development of welding toolFSW.

3.2 External Heat Source Control System

The external heat source used a long rod-shaped heater in this proposed FSW tool. The working principle of this heater was based on a heat control system that uses a thermal controller as the main component to control temperature. This system operates by comparing the temperature on the heater with the temperature value determined on the thermo controller set value (SV), using a temperature sensor in the form of a thermocouple.

Heaters were used to heat objects with enough electric power to reach up to 300 watts. A circuit breaker component in the form of a solid-state relay (SSR) was used to control power and ensure safe operation. The solid-state relay working was based on the trigger provided by the thermal controller. When the temperature on the heater approaches the set value (SV), the thermo controller provides a trigger voltage of 3-30Vdc to the SSR to turn the heater on or off. To protect this control system from the risk of overcurrent, which can originate from an input voltage of 220 VAC, a miniature circuit breaker (MCB) component with a rating of 6 Ampere was used.

With this principle, heaters can precisely control temperature and maintain operational safety. The thermal controller functions as the central controller, while the solid-state relay (SSR) and miniature circuit breaker (MCB) play a role in regulating power and protecting the system from potential risks of overcurrent. The control system for this proposed the FSW tool can be seen in more detail in the diagram presented in Fig. 9. This diagram illustrated the main components involved in the heating system and the welding equipment's external heat source control system circuit.

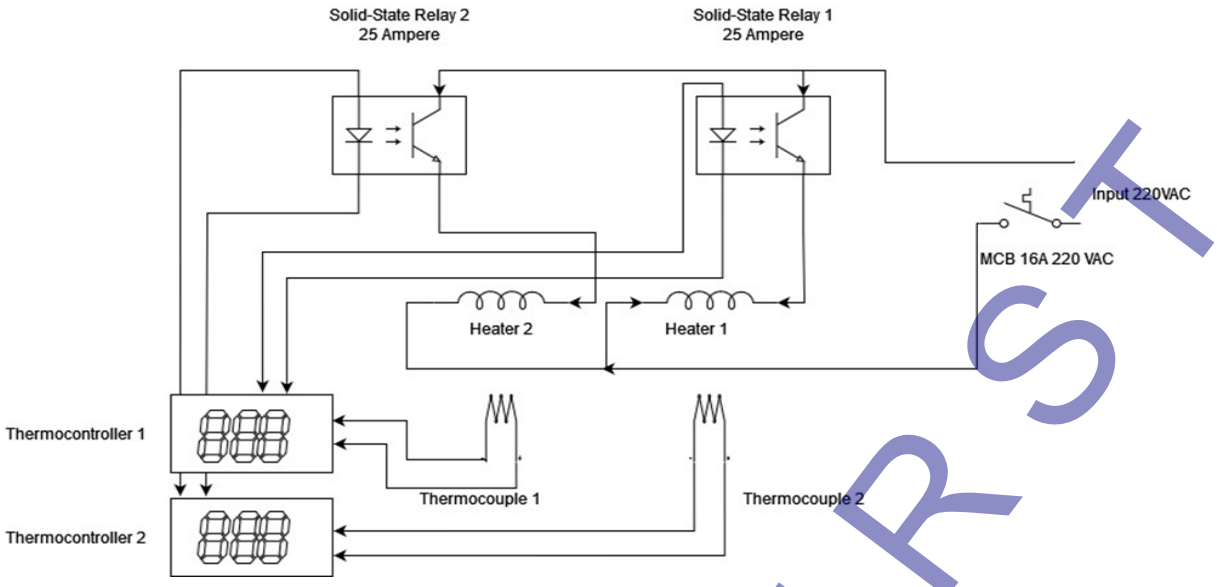

Fig. 9. Diagram of the welding equipment's external heat source control system

3.3 The FSW Joining Process

The experiment was carried out by joining the development of the FSW tool. All components of the proposed FSW tool design are shown in Fig. 10 and Fig. 11 shows the jig component for the material holder.

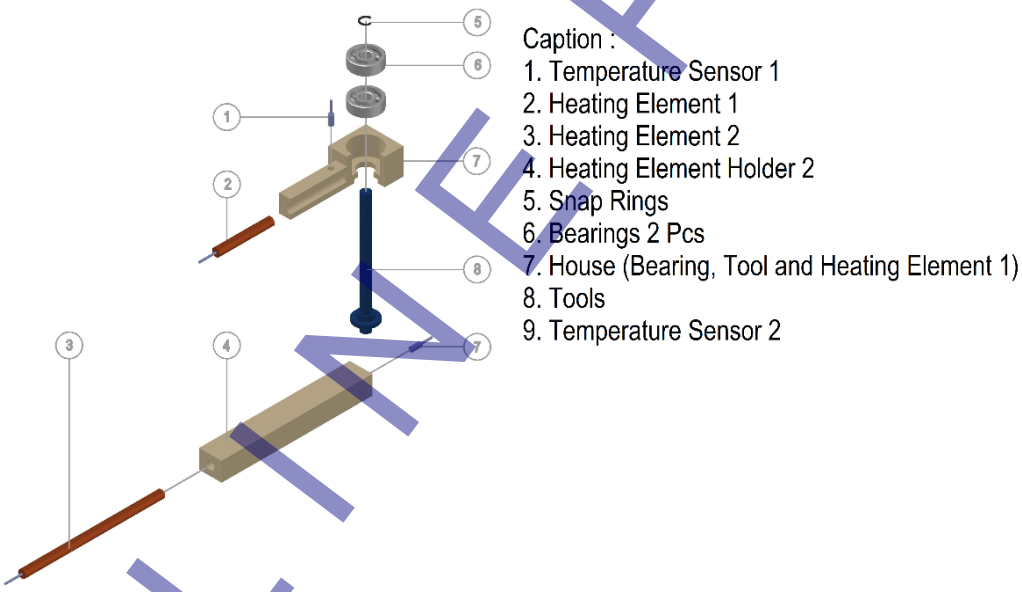

Fig. 10. The arrangement of the FSW tool components

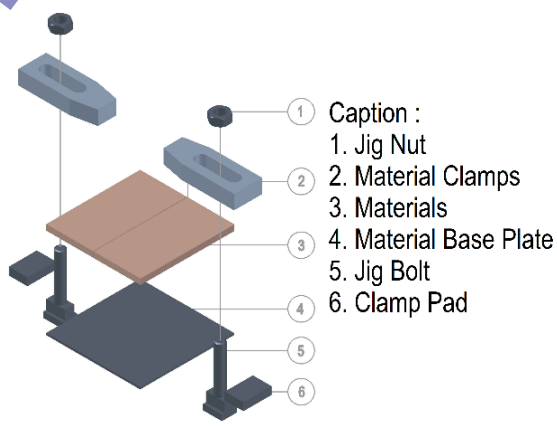

Fig. 11. Arrangement of jig components and material

3.4 The FSW Joining Process Using the Development of the FSW Tool

Welding tool was essential in the Friction Stir Welding (FSW) process. Tool geometry was a crucial factor in FSW because it affected heat, material flow, and the microstructure that was formed. The material used in the FSW splicing process was the short fiberglass-HDPE composite with a ratio of 30% by weight of short fibre and 70% by weight of HDPE. The FSW splicing process was done on the CNC milling machine Fanuc series 21i-M in the Laboratory of Mechanical Engineering Production of the University of Riau, with machine control using G-Code and the Mastercam software. The determination of the geometry of the FSW tool consisting of shoulder and pin was considered with a familiar and standard geometry as in Fig. 12. The angle of inclination of the tool was also consigned to one normal position. The welding depth was adjusted to the thickness of the material sample sheet. Selection of the suitable tool material was crucial to achieve optimal welding results. One material that was often used as a tool was AISI 4140 steel with good mechanical and thermal properties, as shown in Table 1.

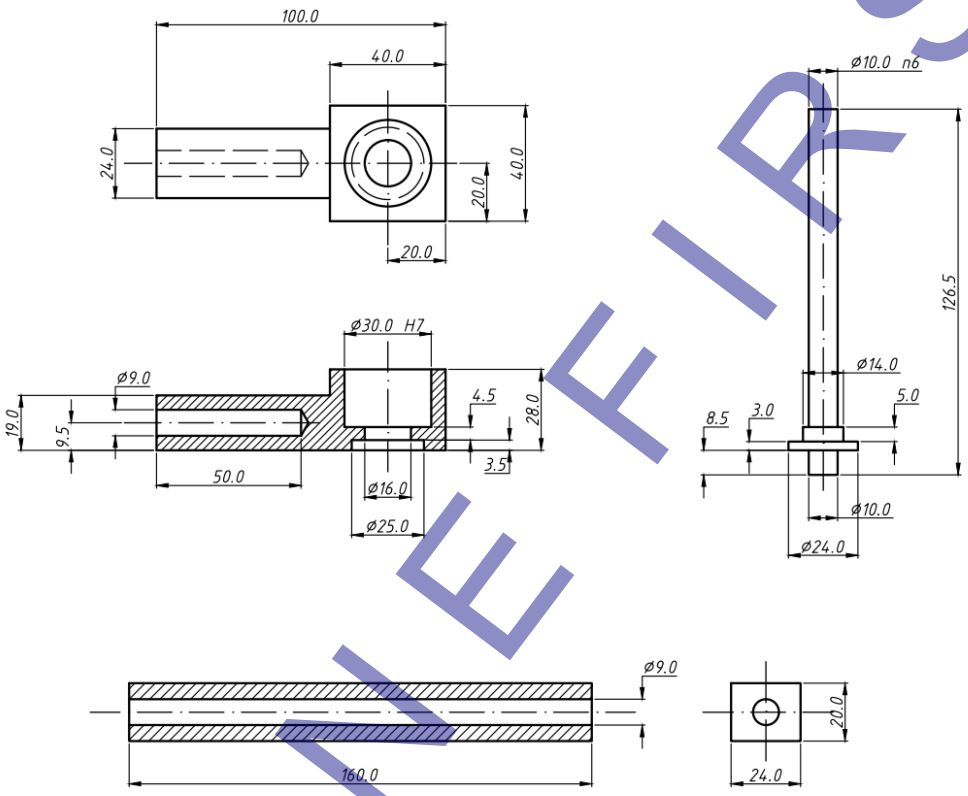

Fig. 12. Dimensions of development of the welding tool shoulder and probe/pin

Table 1. Mechanical properties and thermal properties of AISI 4140

MechanicalProperties	
TensileStrength	655MPa
YieldStrength	415MPa
Bulkmodulus	140GPa
Shearmodulus	80GPa
Elasticmodulus	190– 210 GPa
Poisson'sratio	0,27 – 0,30
Elongationbreak	25,70%
Hardness,Brinell	197
Hardness,Knoop	219
Hardness,RockwellB	92
Hardness,RockwellC	13
Hardness,Vickers	207
Machinability	65
Density	7,85g/cm3
ThermalProperties	
MeltingPoint	1416°C
Thermalexpansioncoefficient	12.2 µm/m°C
Thermalconductivity	42.6 W/mK

The FSW joining process for the short fiberglass-HDPE composite sheets was carried out using a Fanuc Series 21i-M CNC milling machine as the driving tool with rotational speed (ω) varied in 3 conditions, namely 600 rpm, 800 rpm and 1000 rpm. The welding speed (v) or feeding was 5 mm/minute and 10 mm/minute, and the external heat source

has temperatures of 130ºC, 150°C and 170°C. During the FSW joining process, 12 pieces of thermocouple were used along the track on the material and jig plates at the top, middle and bottom. The short fiberglass-HDPE composite sheet of the FSW connection process was shown in Fig. 13.

Fig. 13. The short fiberglass-HDPE composite sheet of FSW process

3.5 The FSW Splicing Tensile Testing

The testing process for the results of the FSW connection in the form of short fiberglass-HDPE composites with a ratio of 30% by weight of short fibres and 70% by weight of HDPE was carried out by starting the stages of making tensile test specimens. The size of the test specimen based on ASTM D3039 standard (Fig. 14), with a fibre orientation angle of 0/90 degree and a cross-fibre arrangement with a width = 25.4 mm, length = 127 mm and a thickness of 5 mm from the recommendation 1.52 – 6.55 mm for reinforcement glass discontinuous fibres. The length specimen on the grips of the test tool was a minimum of 38 mm or adjusted to the grip of the test tool. The tensile test was carried out at a rate of 0.01 mm/s. The results of the tensile test for specimens with feeding 5 m/min and 10 m/min were shown in Table 2 and Table 3, respectively.

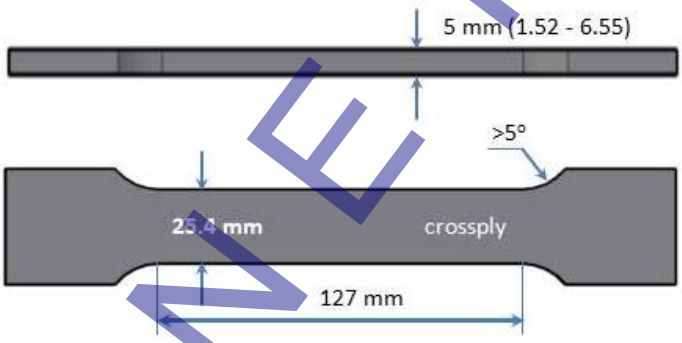

Fig. 14. The size of tensile test specimens

Table 2. Result of the tensile test for the short fiberglass-HDPE composite connections using the development tool of FSW with feeding 5 mm/minute

Feeding (mm/min)	Speed (rpm)	Temperature (ºC)	Sample	Tensile Strength (MPa)	Means (MPa)
5	600	130	1	21.54	21.70
	600	130	2	21.67	
	600	130	3	21.89	
5	600	150	1	18.86	18.63
	600	150	2	18.61	
	600	150	3	18.42	
5	600	170	1	18.21	18.59
	600	170	2	18.73	
	600	170	3	18.83	
5	800	130	1	24.91	24.52
	800	130	2	24.23	
	800	130	3	24.42	
5	800	150	1	19.8	19.61
	800	150	2	19.6	
	800	150	3	19.5	
5	800	170	1	18.26	18.57
	800	170	2	18.58	
	800	170	3	18.87	
5	1000	130	1	22.85	23.15
	1000	130	2	23.14	

	1000	130	3	23.46	
5	1000	150	1	17.94	18.34
	1000	150	2	18.42	
	1000	150	3	18.66	
5	1000	170	1	17.90	17.54
	1000	170	2	17.45	
	1000	170	3	17.27	

Table 3. Result of the tensile test for the short fiberglass-HDPE composite connections using the development tool of FSW with feeding 10 mm/minute

Feeding (mm/min)	Speed (rpm)	Temperature (°C)	Sample	Tensile Strength (MPa)	Means (MPa)
10	600	130	1	19.77	19.5
	600	130	2	19.51	
	600	130	3	19.22	
10	600	150	1	17.91	18.36
	600	150	2	18.43	
	600	150	3	18.65	
10	600	170	1	18.47	18.33
	600	170	2	18.27	
	600	170	3	18.25	
10	800	130	1	20.12	19.94
	800	130	2	19.86	
	800	130	3	19.84	
10	800	150	1	20.32	20.59
	800	150	2	20.57	
	800	150	3	20.88	
10	800	170	1	18.61	18.75
	800	170	2	18.91	
	800	170	3	18.73	
10	1000	130	1	20.51	20.72
	1000	130	2	20.85	
	1000	130	3	20.80	
10	1000	150	1	22.57	22.69
	1000	150	2	22.84	
	1000	150	3	22.66	
10	1000	170	1	17.48	17.88
	1000	170	2	17.89	
	1000	170	3	18.27	

It can be seen in Table 2 that the highest tensile strength of the connection was at a temperature of 130°C with a rotation of 800 rpm and feeding of 5 mm/minute. The lowest tensile strength was at a temperature of 170°C with a rotation of 1000 rpm. It can be seen in Table 3 that the highest tensile strength of the connection was at a temperature of 150°C with a rotation of 800 rpm and feeding of 10 mm/minute. The lowest tensile strength was at a temperature of 170°C with a rotation of 1000 rpm.

The lowest tensile strength at both feeds of 5 mm/minute and 10 mm/minute occurred at a temperature of 170°C with a rotation of 1000 rpm. In this condition, there appears to be a lack of fiber or more polyethylene because the strain that occurs is close to the pure polyethylene tensile test results curve shown in the curve stress-strain (Fig.15) and (Fig.16). This situation may occur because high temperatures cause HDPE to become more fluid or its viscosity decreases. In addition, high rotational speeds push the fibers in the direction of tool movement, resulting in a lack of fibers in the welding area.

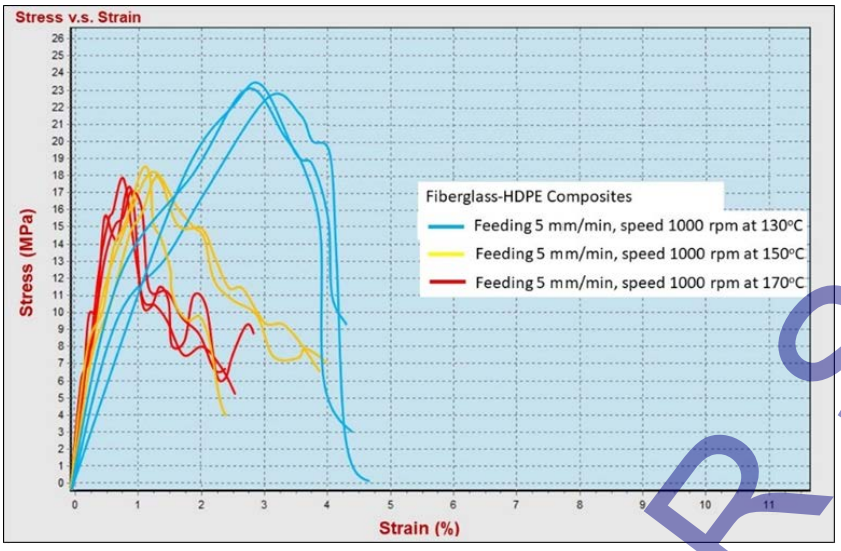

Fig. 15. The Curve Stress-Strain of Short fiberglass-HDPE composite with Feeding 5 mm/minute; speed 1000 rpm

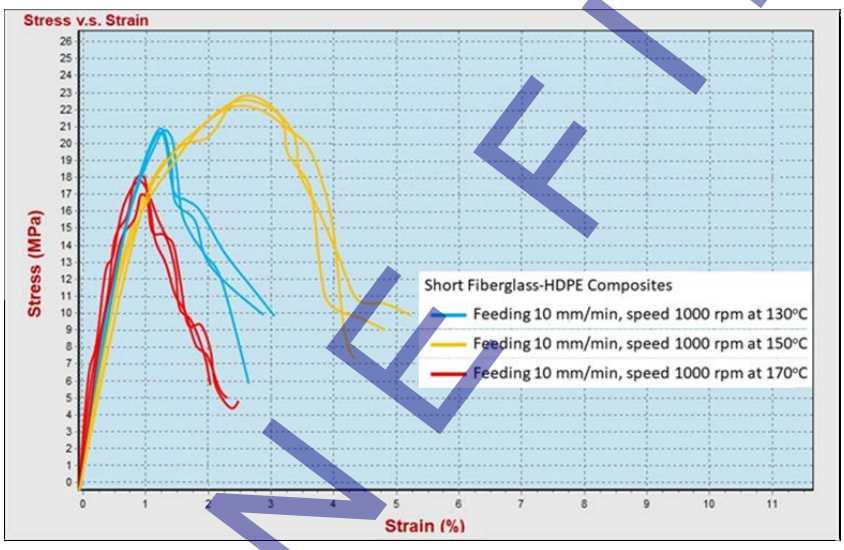

Fig.16. The Curve Stress-Strain of Short fiberglass-HDPE composite with Feeding 10 mm/minute; speed 1000 rpm

The best connection tensile strength and toughness occurred was at a temperature of 130°C with a rotation of 800 rpm and a feeding rate of 5 mm/min shown in the curve stress-strain (Fig.17). This is followed by a temperature of 150°C with a rotation of 1000 rpm and a feeding rate of 10 mm/min shown in the curve stress-strain (Fig.16), and it has suitable welding tensile strength. However, the higher the temperature, the strength of the connection would drop as other connections.

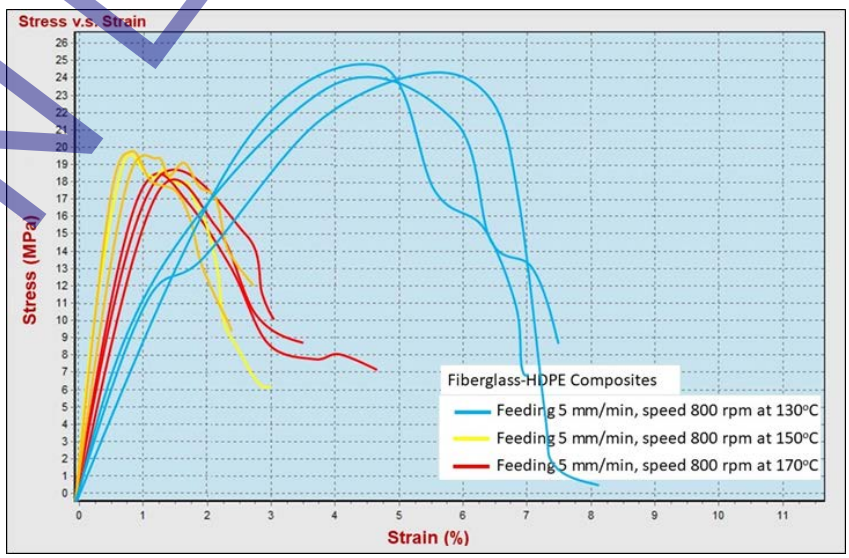

Fig. 17. The Curve Stress-Strain of Short fiberglass-HDPE composite with Feeding 5 mm/minute; speed 800 rpm

Table 4. Tensile Strength of Short Fiberglass-HDPE Composite, Short Fiberglass-HDPE Composite joint with FSW and Pure HDPE

Material	Tensile Strength (MPa)	Means (MPa)
ShortFiberglass-HDPE Composite (30%-70%) weight*0	25.67 25.91 26.24	25.94
Short Fiberglass-HDPE Composites: FSW (*f* = 5 mm/min;*s* = 800 rpm; *t* =130°C)	-	24.52
Short Fiberglass-HDPE Composites: FSW (*f* =10 mm/min;*s* =1000 rpm; *t* =150°C)	-	22.69
Pure HDPE: FSW ((*f* =10 mm/min; *s* =1000 rpm)	21.26 21.43 21.87	21.51
Pure HDPE*)	23.41 24.27 24.23	23,97

* Data Source [28]

From table 4, it can be seen that there is a difference in the decrease in strength of the short fiberglass-HDPE composite due to the joining process using friction stir welding. A decrease in strength of 6% occurred in the connection with a feeding of 5 mm/minute, rotation of 800 rpm, and temperature of 130°C. Meanwhile, the reduction in strength reached 14.3% when the welding process was carried out with a feeding of 10 m/minute, a rotation of 1000 rpm, and temperature of 150°C. Furthermore, when compared with pure HDPE without welding, it can be seen that the reduction in strength due to welding on pure HDPE is 13.2% when a feeding of 10 m/minute and a rotation of 1000 rpm is used.

The strength reduction ranges from 6% to 14.3% for short fiberglass-HDPE composites and 13.2% for pure HDPE due to the Friction Stir Welding process. In general, in most cases, the generally accepted strength reduction limit for welding is approximately 10-15% of the strength of the base material. Thus, reducing the strength of fiberglass-HDPE composite and pure HDPE joints to 10-15% of the strength of the base material is a normal and reasonable condition.

To see the difference between the overall testing of the HDPE composite material reinforced by the glass fiber is shown in Fig. 18 and Fig. 19. In Fig. 18 shows that the biggest tensile strength is at 800 rpm speed for a connection with feeding 5 mm/minutes and a temperature of 130°C. And the higher the temperature can cause the strength of the connection to decrease, whereas with feeding 10 mm/min shows better strength at 1000 rpm.

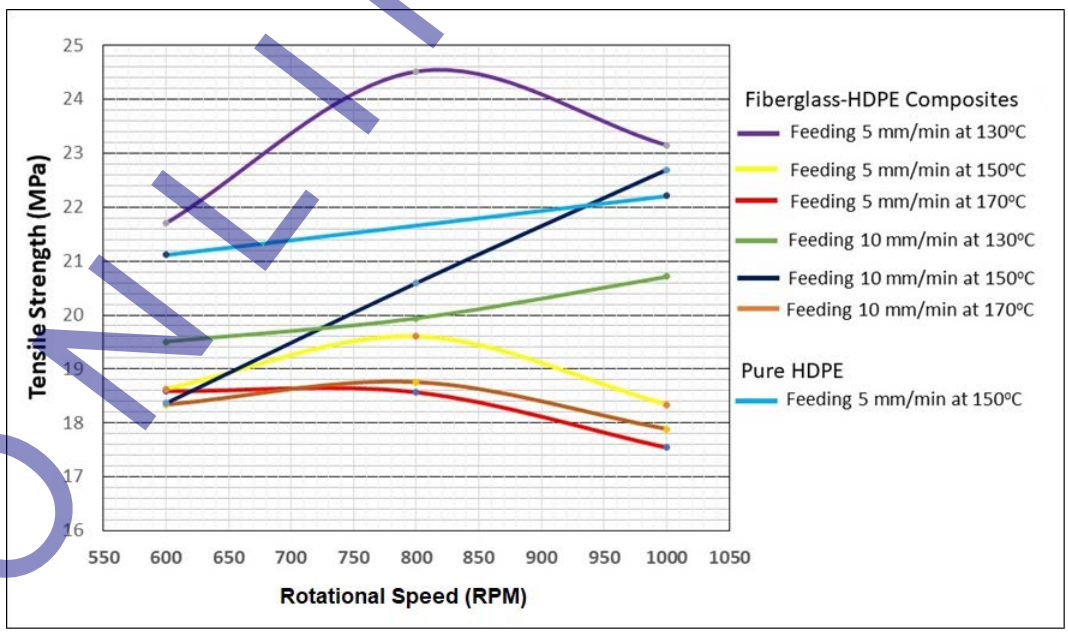

Fig. 18. Relationship curve between tensile strength and stirring speed for fiberglass-HDPE composite with feeding of 5 m/minute and 10 m/minute at temperatures of 130°C, 150°C and 170°C

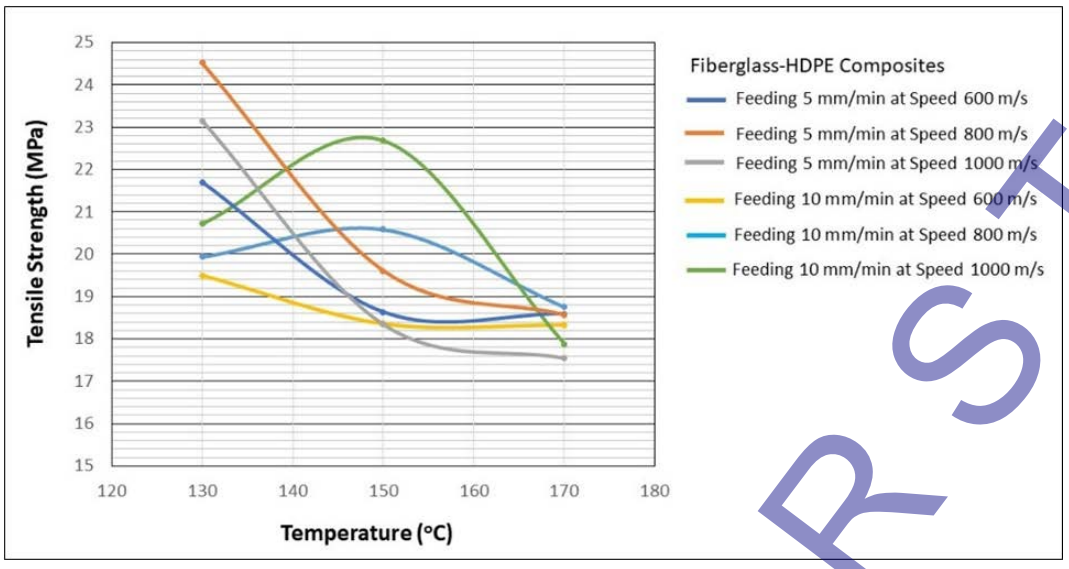

Fig. 19. Relationship curve between tensile strength and temperature in fiberglass-HDPE composite with feeding 5 m/min and 10 m/min at speeds of 600, 800 and 1000 rpm

In Fig. 19 shows the best joint strength is at a temperature of 130°C. There is also good weld strength at a temperature of 150°C with a rotation of 1000 rpm and a feeding of 10 mm/minutes, but the higher temperature, the strength of the joint will decrease like other joints.

4 CONCLUSIONS

The conventional welding tool of FSW needed to be more adequate for welding polymer and polymer composite materials because they produce rough joints and non-optimal frictional heat. Then, this paper proposed to develop the tool by adding an external heat source on the shoulder and probe/pin to increase efficiency in HDPE connection. The FSW joining process for short fiberglass-HDPE composite sheets was carried out using a Fanuc Series 21i-M CNC milling machine as the driving tool with rotational speed (ω) varied in 3 conditions, namely 600 rpm, 800 rpm and 1000 rpm. The welding speed (v) or feeding was at 5 mm/minuteand 10 mm/minute, as well as providing an external heat source with a temperature of 130ºC, 150ºC and 170ºC. The joining sheets results were carried out with the tensile tests. The testresults showed the highest tensile strength was an average value of 24.52 MPa at a rotational speed of 800 rpm, a feeding of 5 mm/min and a temperature of 130ºC. The lowest tensile strength was an average value of 17.54 MPa at a temperature of 170°C with a speed of 1000 rpm. Based on the experiment results, the developed tool of FSW produced the connection to short fiberglass-HDPE composite material. The application preheated in front of the material path before carrying out the FSW process, accelerating material melting and increasing the efficiency and speed of welding in the FSW process for HDPE materials, including fibreglass-HDPE composites. The position and distance of the heat element to melt the material and the pin that will stir need to be considered for future work.

5 REFERENCES

[1] Huang, Y., Meng, X., Xie, Y., et al. (2018). Friction stir welding/processing of polymers and polymer matrix composites. *Composites: Part A 2018*, vol. 105, 235-257, DOI: 10.1016/j.compositesa.2017.12.005

[2] Strand, S.R. (2004). *Effects of Friction Stir Welding on Polymer Microstructure*. Brigham Young University.

[3] Barmouz, M., Shahi, P. & Asadi, P. (2014). Friction stir welding/processing of polymeric materials. *Advances in Friction-Stir Welding and Processing*, vol.*14*, 601-670, DOI:10.1533/9780857094551.601

[4] Mostafapour, A. & Taghizad Asad, F. (2016). Investigations on joining of nylon 6 plates via novel method of heat assisted friction stir welding to find the optimum process parameters. *Science and Technology of Welding and Joining*, vol. 21, no. 8, 660-669, DOI: 10.1080/13621718.2016.1169669

[5] Mishra, R.S. & Ma, Z.Y. (2005). Friction stir welding and processing. *Materials science and engineering: R: Reports*, vol. *50, no.* 1-2, 1-78, DOI: /10.1016/j.mser.2005.07.001

[6] Eslami, S., Tavares, P.J. & Moreira, P.M.G.P. (2017). Friction stir welding tooling for polymers: review and prospects. *The International Journal of Advanced Manufacturing Technology*, vol. *89*, 1677-1690, DOI: 10.1007/s00170-016-9205-0

[7] Clark, J. (1999). *Friction stir welding of polymeric materials.* Utah: Brigham Young University.

[8] Saeedy, S. & Givi, M B. (2011). Investigation of the effects of critical process parameters of friction stir welding of polyethylene. *Proceedings of the Institution of Mechanical Engineers, Part B: Journal of Engineering Manufacture*, vol. *225, no.* 8, 1305-1310, DOI: 10.1243/09544054JEM19

[9] Kusharjanta, B., Raharjo, W. P., & Triyono, T. (2016). Temperature comparison of initial, middle and final point of polypropylene friction stir welded. In *AIP Conference Proceedings*, *AIP Publishing*, vol. 1717, no.1, DOI: 10.1063/1.4943454

[10] Lambiase, F., Paoletti, A. & Di Ilio, A. (2017). Effect of tool geometry on mechanical behavior of friction stir spot welds of polycarbonate sheets. *The International Journal of Advanced Manufacturing Technology*, vol. *88*, 3005-3016, DOI: 10.1007/s00170-016-9017-2

[11] Sadeghian, N. & Givi, M.K.B. (2015). Experimental optimization of the mechanical properties of friction stir welded Acrylonitrile Butadiene Styrene sheets. *Materials & Design*, vol. *67*, 145-153, DOI: 10.1016/j.matdes.2014.11.032

[12] Ahmadi, H., Mostafa Arab, N.B. & Ghasemi, F.A. (2014). Optimization of process parameters for friction stir lap welding of carbon fibre reinforced thermoplastic composites by Taguchi method. *Journal of Mechanical Science and Technology*, vol. *28*, 279-284, DOI: 10.1007/s12206-013-0966-1

[13] Sharma, V., Prakash, U. & Kumar, B.M. (2015). Surface composites by friction stir processing: A review. *Journal of Materials Processing Technology*, vol. *224*, 117-134, DOI: 10.1016/j.jmatprotec.2015.04.019

[14] Balasubramanian, V. (2008). Relationship between base metal properties and friction stir welding process parameters. *Materials Science and Engineering: A*, vol. *480, no.* 1-2, 397-403, DOI: 10.1016/j.msea.2007.07.048

[15] Heidarzadeh, A., Jabbari, M. & Esmaily, M. (2015). Prediction of grain size and mechanical properties in friction stir welded pure copper joints using a thermal model. *The International Journal of Advanced Manufacturing Technology*, vol. *77*, 1819-1829, DOI: 10.1007/s00170-014-6543-7

[16] Palanivel, R., Mathews, P.K., Murugan, N. & Dinaharan, I. (2012). Effect of tool rotational speed and pin profile on microstructure and tensile strength of dissimilar friction stir welded AA5083-H111 and AA6351-T6 aluminum alloys. *Materials & Design*, vol. 40, 7-16, DOI: 10.1016/j.matdes.2012.03.027.

[17] Zohoor, M., Givi, M. B. & Salami, P. (2012). Effect of processing parameters on fabrication of Al–Mg/Cu composites via friction stir processing. *Materials & Design*, vol. 39, 358-365, DOI: 10.1016/j.matdes.2012.02.042

[18] Elangovan, K., Balasubramanian, V. (2008). Influences of tool pin profile and tool shoulder diameter on the formation of friction stir processing zone in AA6061 aluminium alloy. *Material Design*, vol. 29, 362-373, DOI: 10.1016/ j.matdes.2007.01.030

[19] Troughton, M.J. (2008). Handbook of plastics joining: a practical guide. The2nd Edition, William Andrew.

[20] Yohanes, Y., Siregar, E., Susilawati, A. & Badri, M. (2018). Performance analysis of flywheel addition on drive system of rotary friction welding machine. *Journal of Ocean, Mechanical and Aerospace -Science and Engineering-*, vol. 52, no. 1, 14-19

[21] Yohanes, Y. & Meipen, M. (2022). Effect of rotational speed on hardness value and area of vertical bar-plate rotary friction weld joint. *Journal of Ocean, Mechanical and Aerospace -Science and Engineering-*, vol. 66, no. 3, 77-81, DOI: 10.36842/jomase.v66i3.327

[22] Sorensen, C.D., Nelson, T.W., Strand, S., Johns, C. & Christensen, J. (2001). Joining of thermoplastics with friction stir welding. In *ANTEC 2001 conference proceedings*, p. 5

[23] Aydin, M. (2010). Effects of welding parameters and pre-heating on the friction stir welding of UHMW-polyethylene. *Polymer-Plastics Technology and Engineering*, vol. 49, no. 6, 595-601, DOI: 10.1080/03602551003664503

[24] Bozkurt, Y. (2012). The optimization of friction stir welding process parameters to achieve maximum tensile strength in polyethylene sheets. *Materials & Design*, vol. 35, 440-445, DOI: 10.1016/j.matdes.2011.09.008

[25] Mendes, N., Loureiro, A., Martins, C., Neto, P. & Pires, J. N. (2014). Morphology and strength of acrylonitrile butadiene styrene welds performed by robotic friction stir welding. *Materials & Design*, vol. 64, 81-90, DOI: 0.1016/j.matdes.2014.07.047

[26] Mendes, N., Loureiro, A., Martins, C., Neto, P.& Pires, J.N. (2014). Effect of friction stir welding parameters on morphology and strength of acrylonitrile butadiene styrene plate welds. *Materials & Design*, vol. 58, 457-464, DOI: 10.1016/j.matdes.2014.02.036

[27] Jaiganesh, V., Maruthu, B. & Gopinath, E. (2014). Optimization of process parameters on friction stir welding of high-density polypropylene plat. *Procedia Engineering*, vol. 97, 1957-1965, DOI: 10.1016/j.proeng.2014.12.350

[28] M. Dalil, Wirjosentono B., Ginting A., Koto J., Arief D.S. (2023). Tensile characteristics of fiberglass-filled high density poyethylene composites formed using hot press mold for cold water pipe. AIP Conference Proceedings 2626, 040023, https://doi.org/10.1063/5.0136121

[29] Mandelkern Leo, and Rufina G. Alamo, 1999, “Polymer Data Handbook-Polyethylene, Linear high density” Oxford University Press, Inc.

[30] Shelley Mee Y., 1999, “Polymer Data Handbook-Polyesthers unsaturated” Oxford University Press, Inc.
[31] Andrady Anthony L., 1999, “Polymer Data Handbook-Poly (vinyl chloride)” Oxford University Press, Inc.
[32] Royan, R., Nishata Royan et al. (2021). Current state and challenges of natural fibre-reinforced polymer composites as feeder in fdm-based 3d printing. *Polymers* vol. 13, 14 2289
[33] Peng, W. et al. (2020). Review of plastic surgery biomaterials and current progress in their 3d manufacturing technology. *Materials (Basel, Switzerland)* vol. 13, 18 4108
[34] Amjadi, M. & Fatemi, A. (2020). Tensile behavior of high-density polyethylene including the effects of processing technique, thickness, temperature, and strain rate. *Polymers* vol. 12, 9 1857

Paper submitted: 01.10.2023.
Paper accepted: 20.03.2024.