Istraživanja i projektovanja za privredu
ISSN 1451-4117
DOI:10.5937/jaes0-48077
www.engineeringscience.rs

iipp publishing

Journal of Applied Engineering Science
Vol. 22, No. 2, 2024
Original Scientific Paper
Paper number: xx(xxxx)x, xxxx, xxx-xxx

ENERGY EFFICIENCY OF A HYBRID ROAD TRAIN WITH AN ACTIVE SEMI-TRAILER FOR ROAD CONSTRUCTION WORK

Alexey Vasiliev[1], Roman Dobretsov[1], Sergey Voinash[2], Yurii Syromiatnykov[3], Alexandra Orekhovskaya[2,]*, Ramil Zagidullin[2], Viktoriia Sokolova[2]

[1] Institute of Mechanical Engineering, Materials and Transport, Higher School of Transport, Peter the Great St. Petersburg Polytechnic University, St. Petersburg, Russia
[2] Institute of Design and Spatial Arts, Research Laboratory "Intellectual Mobility", Kazan Federal University, Kazan, Russia
[3] Technology of product processing and certification, Technology of production and processing of products, Samarkand state university veterinary medicine, livestock and biotechnology, Samarkand, Uzbekistan

** aaorekhovskaya@kpfu.ru*

The previous experience of creating experimental road trains with an active trailer and semi-trailer is analyzed against the background of modern technological capabilities of transport engineering and the logistical needs of modern construction. The expediency of implementing the concept of a road train with an active trailer based on modern electromechanical technologies is shown. The purpose of the study is to increase the energy efficiency of road trains used in construction for transporting long-length objects (beams, piles, bridge trusses, panels, etc.) by using an active trailer link with an electromechanical drive. The study solves the problem of modeling the movement of road trains with passive and active semi-trailers and comparing their energy efficiency and safety indicators. The methods of modeling the movement of cars and road trains, characteristic of the theory of movement of transport vehicles, approaches of theoretical mechanics and applications of differential calculus, applied numerical modeling in the SimuLink environment are used. A mathematical model has been obtained that allows calculating the energy efficiency of a road train when using passive (towed) and active semi-trailers. The cycle of the road train movement has been developed and tested for use in severe road conditions (construction with weak road infrastructure, forest complex, transportation of special cargo). The implementation of the computational model by means of the SimuLink software package is proposed. Based on the simulation results, conclusions are made on the energy efficiency and safety of road trains with an active trailer link with an electromechanical transmission.

Keywords: transportation of long structures in construction, active trailers, hybrid road train, energy consumption, all-terrain vehicles

1 INTRODUCTION

An active trailer/semi–trailer (AT) is a trailer/semi-trailer with a wheel drive from a power plant. At the beginning of the 1950s of the last centuries, the Soviet designer Boris Mikhailovich Fitterman considered himself the founder of this AP concept. However, the American inventor Robert Gilmore Le Tourneau can also be considered the founder of this idea.

In the USSR, the development of this concept took place gradually, it all started with the mechanical supply of power to the trailer. So the first experimental model based on the GAZ-63 D with an additional power take-off box was built. The torque was transmitted by means of gearboxes and cardan shafts. After the tests, the weakness of the design and standard units to increased loads was revealed [1, 2]. Later, road trains with a mechanical drive to a semi-trailer were successfully tested, for example: GAZ-66K with a single-axle semi-trailer with a mechanical wheel drive, ZIL-157KV-1 tractor with a PAU-3 semi-trailer for a 9T22 transport vehicle, MAZ-502B tractor with a single-axle active semi-trailer, Ural-380 with an active Ural-862 semi-trailer, KrAZ-E259 with an active on-board semi-trailer E834, ZIL-157KV-1 with a mechanical drive of semi-trailer wheels, NAMI-058S and a semi-trailer Ural-862, an active semi-trailer MMZ-881, KrAZ-260D and a semi-trailer MAZ-9382 with a mechanical drive [1, 2]. In addition to the mechanical drive, then a hydraulic drive was also used in road trains with active trailers in the USSR, through the power take-off box, part of the torque was transferred to the hydraulic pump, from which part of the fluid was directed to the hydraulic motor through the nozzles, then the torque from the hydraulic motor was transmitted to the trailer drive axles through a step-down gearbox and cardan shafts. Examples of road trains with hydraulic drive: special tractor ZIL-157V with hydraulic drive of the wheels of the semitrailer MMZ-584, ZIL-137 with hydrostatic drive [1, 2]. When carrying out construction works with complex development of territories, it is advisable to ensure the construction of bridges, transport interchanges and other engineering structures as quickly as possible, during the construction of which it is required to use long-length structural elements (trusses, massive reinforced beams, plates), pre-manufactured in factory conditions. Prompt delivery of such goods is possible by air, but this method is usually not cost-effective. Delivery by water transport is practically inaccessible, except in cases of construction on navigable rivers and on large bodies of water.

The use of cars and road trains usually requires costly and long-term preparation of road infrastructure. Therefore, it is of interest to develop technologies that allow for the rapid transportation of long loads of large mass in conditions not only of special roads or general–purpose roads, but also with minimal preliminary preparation of the terrain

(preferably with the least damage to the routes along which traffic is carried out and while minimizing transportation costs, which, in the particular case of using a transport vehicle, due to the increased energy efficiency of its chassis). This approach is possible to implement with the help of special road trains based on wheeled and tracked vehicles equipped with a hybrid power plant and an electromechanical transmission that allows the use of an active trailer link. [3, 4, 5, 6, 7, 8]. The traditional advantages of using a hybrid power plant are associated with increased efficiency and reduced emission of hydrocarbons into the atmosphere [9, 10]. The use of the technology in question inevitably leads to complications and increase in the cost of the design.

2 RESEARCH METHODS

The methods of the theory of movement of transport vehicles were used in the work (the calculations are based on the equations of the dynamics of the movement of the road train, in turn, using the equations describing the rolling process of the wheel, given in the works [4, 5, 11, 12, 13, 14, 15]), methods of the theory of solving inventive problems [16], mathematical apparatus of differential calculus, as well as numerical modeling in Simulink application software packages

3 RESULTS

The developed mathematical model for quantitative comparative evaluation of the energy consumption of a road train is based on the following basic assumptions.

1. The case of on–board symmetry is considered - the equality of normal (respectively, transverse and longitudinal) reactions on the wheels of the sides of each axis (that is, a flat, "bicycle" model is equivalent).
2. We neglect the geometric dimensions of the contact spot (the model of the point contact of the wheel with the support base is considered).
3. The heat engine and the electric machine are characterized by external parameters (torque, angular velocity, shaft power).
4. We neglect to change the position of the height of the center of gravity for the tractor, trailer, road train as a whole.
5. The torque is distributed equally for the tractor between the three driving axles, for the active semi-trailer – between the two driving axles.

A heat engine with compression ignition ("diesel"), a gearbox (we have five forward gears, since it is the comparison of road trains with the same total power, the same transmissions, that modeling a larger number of gears does not make sense for comparison), as part of the drive axle gearbox, is installed on the tractor as the main source of energy. A symmetrical gear differential is used. An electromechanical transmission is installed on the active trailer: from the traction electric motor, the torque is transmitted to the driving wheels through a dual-mode planetary reduction gearbox, main gear and a symmetrical differential (see works [1,2]). The structure of the tractor and semi-trailer power transmission is illustrated in Fig. 1.

Further, the article compares four different models of a road train: a tractor with a 350 kW internal combustion engine with a passive semi-trailer, a tractor with a 200 kW internal combustion engine with a 150 kW semi-trailer with electric motors without a generator set (energy storage is conditionally pre-charged), a tractor with a 200 kW internal combustion engine coupled with a 150 kW generator set installed on the tractor after the transfer case with a semi-trailer with a 150 kW electric motor.

In Fig. 1 (and further, when describing the mathematical model), the following notation is used.

P_w – longitudinal force of aerodynamic drag; $G_{1,2}$ – weight of tractor, trailer; R_{xi} – longitudinal reactions of wheels; R_{zi} – normal reactions of wheels; M_{fi} and M_{ki}– rolling resistance moments and wheel torques; J_{ki} and r_d – moment of inertia and dynamic rolling radius of the wheel; ω_{xi} – angular velocities of wheels; V is the speed and acceleration of the road train; Hc is the height of the center of mass of the road train; L_1, L_2, L_3, L_4, L_5 are the distances from the center of mass of the road train to the axes i = 1,2,3,4,5; α is the angle of inclination of the trackbed; ω_{dv}, M_{dv} and J_{dv}, – angular velocity, torque on the shaft of the internal combustion engine, the moment of inertia of the rotating parts of the transmission, brought to the output shaft of the internal combustion engine; $i_{tr1,2}$ and $p_{meh1,2}$ – gear ratio and transmission efficiency of the tractor, semi-trailer.

The calculation of energy consumption for such a tractor is made taking into account two different variants of the generator operation in the Silmulink program (Fig. 2). The first generator operation program assumes that the generator will always receive a command to issue a certain moment (Fig. 3). Depending on the speed, the required control action is created. The second program takes into account the current moment on the tractor engine, and a command is given to the generator to create the necessary moment of resistance on the shaft so that the tractor engine always works in the zone of maximum torque and maximum efficiency.

Taking into account the above assumptions, we write down a system of differential equations characterizing the dynamics of the tractor movement:

$$m_1\dot{V}_1 = \sum_{i=1}^{3} R_{xi} - G_1 sin\alpha - P_w - P_{kp}; J_{dv}\dot{\omega}_{dv} = M_{dv} - \frac{1}{i_{tr1}\eta_{tr1}} \cdot \sum_{i=1}^{3} M_{ki}$$

$$J_{ki}\dot{\omega}_{ki} = -R_{xi}r_d - M_{fi} + M_{ki};$$

i=1...3.

We introduce additional designations: ω_{edv}, M_{edv} and J_{ed} – angular velocity, the moment on the TED shaft, the moment of inertia of the rotating parts of the transmission, brought to the TED output shaft;
Taking into account the accepted assumptions, the movement of an active semi-trailer is described by a system of differential equations:

$$m\dot{V}_2 = \sum_{i=4}^{5} R_{xi} - G_2 sin\alpha - P_w + P_{kp}; J_{edv}\dot{\omega}_{edv} = M_{edv} - \frac{1}{i_{tr2}\eta_{tr2}} \cdot \sum_{i=4}^{5} M_{ki}$$

$$J_{ki}\dot{\omega}_{ki} = -R_{xi}r_d - M_{fi} + M_{ki};$$

i=4...5.

When solving the above systems of differential equations, it is possible to determine the required values of all force factors embedded in the mathematical model of the movement of the road train. In this case, the longitudinal force on the coupling device (CD) is calculated using the expression considered in [3,4]:

$$P_{kp} = (X_{c1} - X_{c2})C_0 + (V_{x1} - V_{x2})B_0.$$

In the last expression, the designations are used: C_0 is the coefficients of stiffness and B_0 is the coefficients resistance of the CD damper in the longitudinal direction; X_{c1} and X_{c2} are the longitudinal coordinates of the centers of mass for the tractor and semi-trailer.

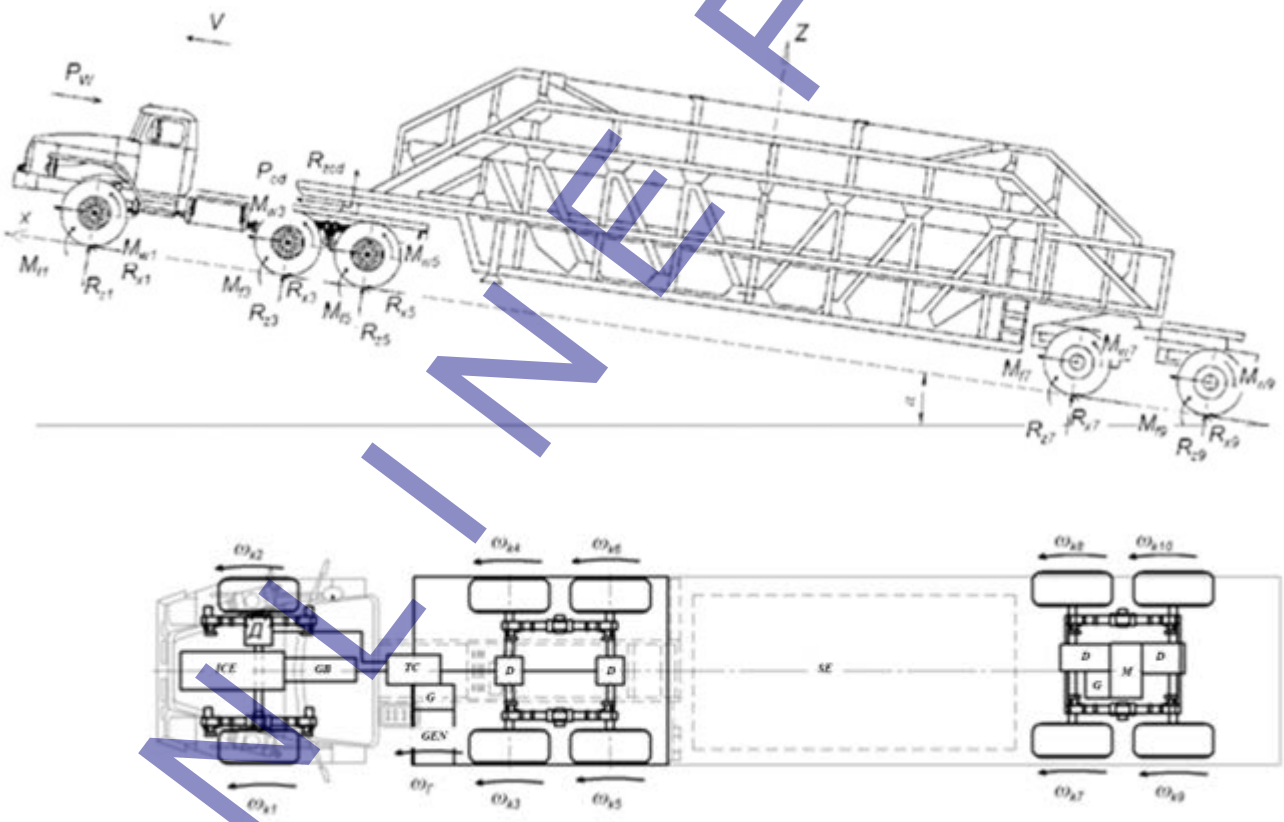

Fig. 1. Calculation scheme for the movement of a road train with an active semi-trailer; decoding of abbreviations: Internal combustion engine – ICE, gearbox – GB, TC – transfer case, G – gearbox (in front of the generator and in front of the axles of the semi–trailer), GEN – generator, D – differential, M - electric motor of the semi-trailer, SE - energy storage [4]

$$R_{xi} = \varphi(S) \cdot R_{zi} \text{ and } \varphi(S) = \varphi_{max}(1 - e^{-\frac{S}{S_0}}) \cdot (1 + e^{-\frac{S}{S_0}}) .$$

Here the constants φ_{max}, S_0, S – are determined by the characteristics of the support surface and the tire. When driving on dry asphalt, the coefficient of adhesion of tires with the support of the bottom is
φmax = 0.8; S_0 = 0.015; S = 0.04 [2] and

$$M_{fi} = fR_{zi}r_d .$$

Let's determine the values of vertical reactions under the wheels, taking into account the effect of acceleration (deceleration). To do this, consider the equations of equilibrium of torques relative to the centers of mass of the corresponding links (points A1,2 are projections of the centers of mass of the tractor and semi-trailer on the plane of the surface of motion):

$$\sum M_{A2} = R_{z7}L_7 + m_2\dot{V}h + G_2 hsina + M_{f7} + R_{z3}L_3 + M_{f9} - R_{z9}L_9 - P_{kp}h_{kp} = 0 \sum M_{A1} = R_{z1}L_1 + M_{f1} + m_1\dot{V}h + G_1 hsina + M_{f3} + R_{z3}L_3 + M_{f5} + P_w h - R_{z5}L_5 + P_{kp}h_{kp} = 0$$

To determine the longitudinal force acting from the driving wheels on the tractor frame, we use the dependence:

$$P_{xi} = (X_{ki} - L_{ki})C_{mob} + (V_{xki} - V_{x1})B_{mob}.$$

Here C_{mob} and V_{mob} are the coefficients of stiffness and damping of the suspension in the longitudinal direction; X_{ki} is the value of the abscissa of the i–th axis; V_{x1} is the linear velocity of the center of mass of the tractor.

The vertical reactions of the wheels of the i-th axis for a tractor are determined from the equations:

$$\sum_{i=1}^{3} P_{zi} = G_1 cosa + P_{zs};$$

$$\sum_{i=1}^{3} P_{zi}L_{ki} + P_w h_w + P_{ax1}h_{c1} + P_{zs}l_{s1} + P_{kp}h_{kp1} + G_1 h_{c2} sina + \sum_{i=1}^{3} M_{ci} = 0;$$

$$R_{z2}(l_2 + l_1) - R_{z1}l_2 - R_{z3}l_1 = 0.$$

Here h_w, h_{c1} and h_{cr1} are the vertical distances from the axis of the tractor wheels to the point of application of the aerodynamic drag force, the center of gravity of the tractor and to the CD; l_{s1} is the distance from the center of mass of the tractor to the CD; P_{ax1} is the inertia force of the tractor; M_{si} is the moment of resistance to movement, brought to the i–th axis.

For a trailer, similarly:

$$\sum_{i=4}^{5} P_{zi} + R_{zs} = G_2 cosa;$$

$$\sum_{i=4}^{5} P_{zi}L_{ki} + P_{zs}l_{s2} + P_{ax2}h_{c2} + G_1 sinah_{c2} + \sum_{i=1}^{3} M_{ci} - P_{кр}h_{кр2} = 0;$$

$$R_{z2}(l_2 + l_1) - R_{z1}l_2 - R_{z3}l_1 = 0.$$

The first equation is a consequence of the principle of observing the equality of the sum of normal reactions to the weight of the machine (P_{zs} is the vertical load on the CD), the change in this load can be significant in magnitude and significantly affects the dynamics of the road train.

The second equation is a consequence of the principle of observing the equality of moments acting on a wheeled vehicle in accordance with the acceleration under consideration.

The third equation is obtained as a consequence of the hypothesis that the ends of the vectors of vertical reactions lie in the same plane (see publications [3, 6, 11, 16]).

The control of the internal combustion engine and the TED of the semi-trailer is carried out using a PID controller operating according to the difference between the set and actual linear speeds of movement.

In comparative calculations, variants of a 25-ton road train with the same geometric parameters are considered. The total capacity of the power plants of the road train is 350 kW. Table 1 shows the results of calculations.

The energy costs of movement are determined for the selected cycle by the expression:

$$A = \frac{\int_0^{tц} \omega_{dv}(t)M_{dv}(t)dt}{L_c}$$

Where ω_{dv} is the engine speed, M_{dv} is the engine torque, t_c is the travel time in the cycle, L_c is the path length in the cycle.

The EPA Heavy Duty Urban Dynamometer Driving Schedule for heavy duty vehicle testing was used to assess the energy consumption of road trains

The structure of the computational model created in the Simulink package is shown in Fig. 2. The calculated change in the required force on the hook (CD) of the tractor is shown in Fig. 3.

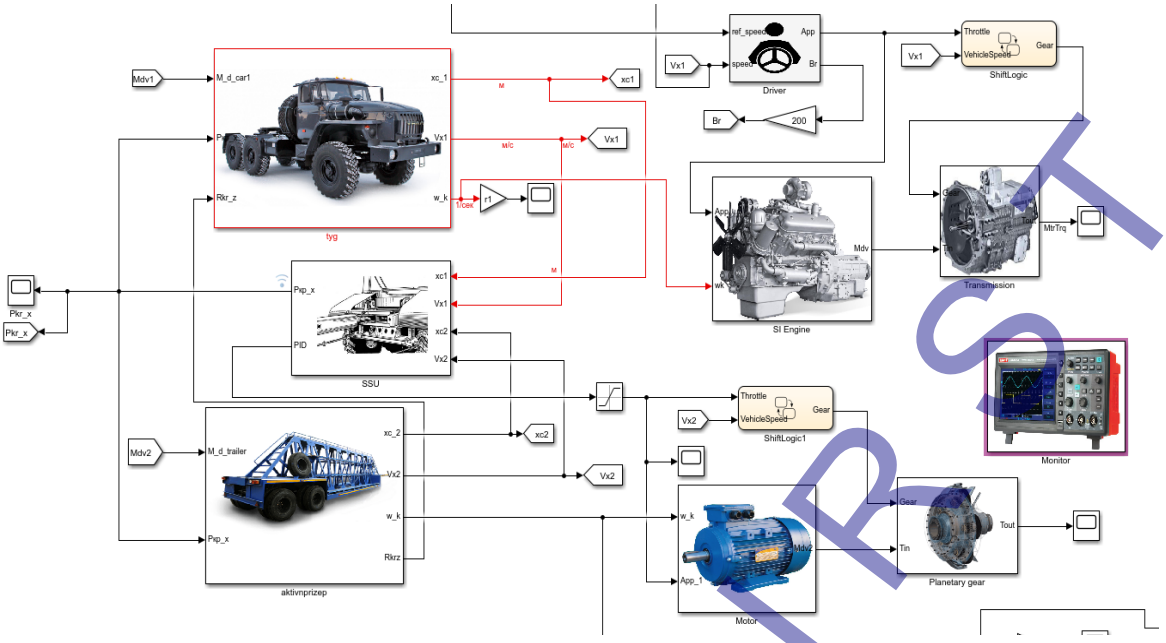

Fig. 2. The structure of the computational model in the simulink package

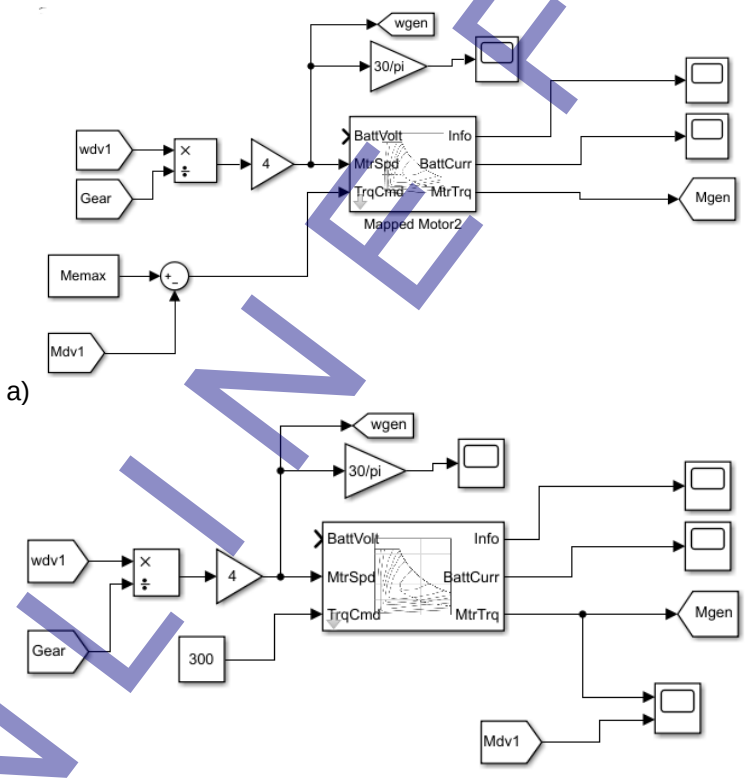

a)

b)

Fig. 3. Simulink model of generator set operation: a) program 1, b) program 2

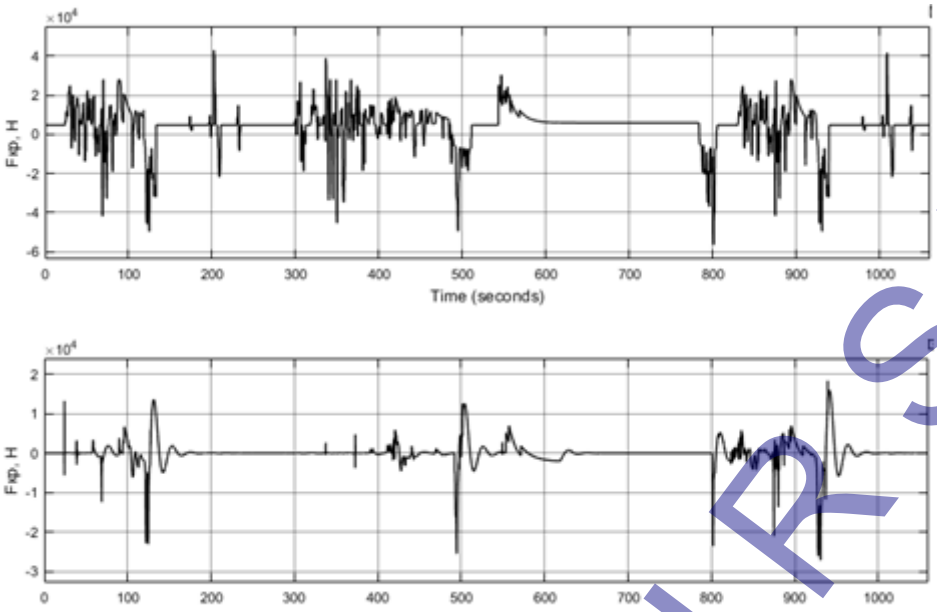

Fig. 4. Changing the force on the hook while driving on a given cycle: for a tractor with a passive (top) and an active trailer (bottom)

The difference in forces in the hitch (fig.4) is due to the fact that the active trailer is controlled by the force on the hook

Table 1. Fragment of initial data and calculation results

	Execution a* with pp	Execution a with ap			Execution a with ap			
Engine	Cummins	Cummins	Electric motor		Cummins	Electric motor		Generator
Power (kW)	350	200	150		200	150		150
Revolutions per minute (rpm)	800…2200	800…2200	-4500…4500		800…2200	-4500…4500		-
Maximum torque, (N*m)	1485	990	525		990	525		525
Calculation results	3.20	1.03	1.60 Z	0.0 R	1.70	1.60 Z	0.2 R	Program 1
								2.48
					1.73	1.60	0.2	Program 2
								2.52

* Designations: a – road train, pp – passive trailer, ap – active trailer, z – costs, p – recovery.

To assess the correctness of the developed mathematical model, the calculation of the energy required for movement at a constant set speed and a comparison of the energy consumption values at the same speed were carried out.

The total forces of resistance to movement will consist of the forces of resistance to movement and the forces of aerodynamic drag.

$$P_{сп} = f \cdot m_{pr} \cdot g.$$

$$P_{сп} = 0.022 \cdot 24000 \cdot 9.81 = 5179.68\ N$$

where mpr is the mass of the trailer, f is the coefficient of rolling resistance taking into account speed.

The effect of speed on the rolling resistance coefficient is taken into account by the formula [16]:

$$f = f_0[1 + (0.0216 \cdot v)^2],$$

$$f = 0.02\,(1 + (0.0216 \cdot 15)^2) = 0.022$$

when driving a road train at low speed, the influence of aerodynamic force can be neglected. In the transport mode, the influence of aerodynamic forces is already significant, so we take into account the aerodynamic force according to the dependence:

$$P_w = c\rho F v^2/2,$$

$$P_w = 0.7 \cdot 1.25 \cdot 3 \cdot 2.5 \cdot 0{,}8 \cdot \frac{15^2}{2} = 590.625\ N$$

The initial data used in the MatLab mathematical model are: h=3 tractor height (m), b=2.5 – tractor width (m); S=0.8·h·b; drag area (m2), where c is the drag coefficient; p is the air density, kg/m^3; F — frontal area of the car, m^2; v — speed of the road train, m/s).

The energy spent on moving at a constant speed of 15 m/s for 60 seconds will be equal to

$$A = P_\Sigma \cdot S$$

$$A = P_\Sigma \cdot S = (590.625 + 5179.68) \cdot 900 = 5193274.5\ J = 5.19MJ$$

$$P = \frac{E_J}{1000 \cdot t_c}$$

The comparison of energy costs is made without taking into account the efficiency of the transmission and internal combustion engine.

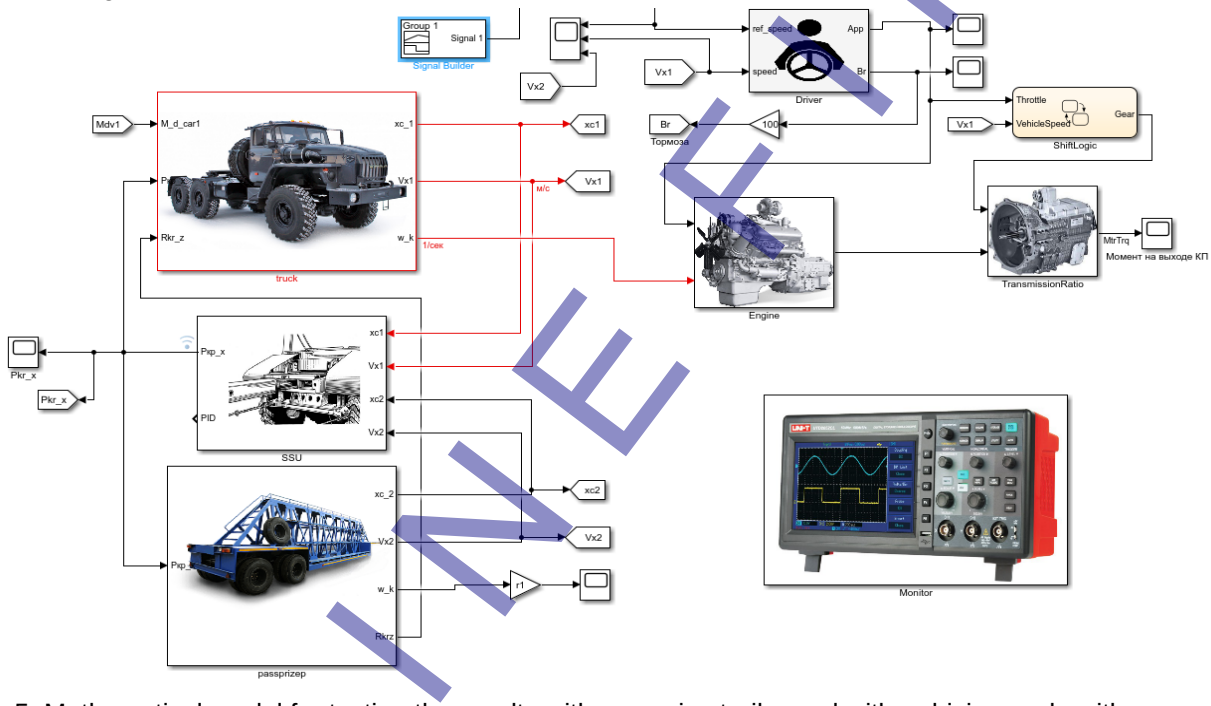

Fig. 5. Mathematical model for testing the results with a passive trailer and with a driving cycle with a constant speed

$$A = \frac{\int_0^{tc} \omega_{dv}(t) M_{dv}(t) dt}{L_c}$$

The structure of the model for the estimated estimation of the energy required for the movement of the road train is shown in fig. 6.

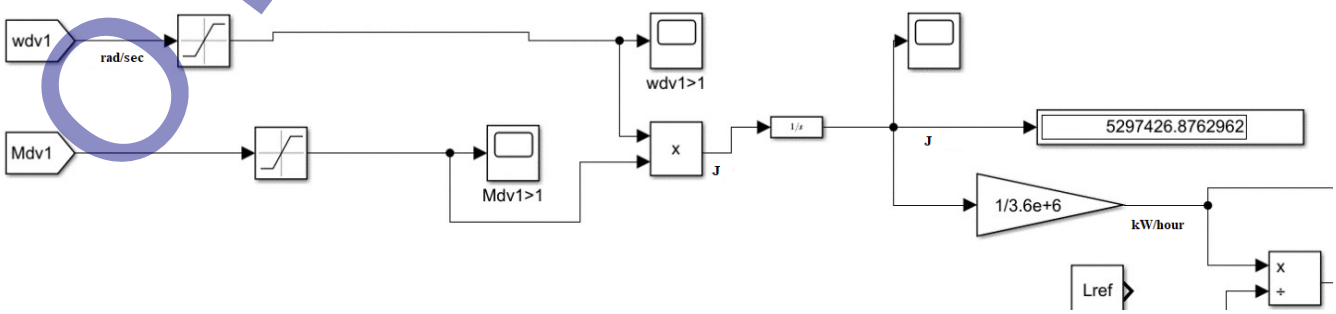

Fig. 6. The structure of the model for the estimated estimation of the energy required for the movement of the road train

The estimated value of energy consumption was 5297.4 kJ.

The error is 2.01% of the analytical value. The error is due to the fact that the driver's model "reacts" with a slight deviation from the set speed due to driving in a simulated mathematical model by means of a PID controller.

4 DISCUSSION

According to the results of the calculation (see Table. 1) it can be concluded that the energy costs incurred by the internal combustion engine in the considered driving cycle for a road train with a passive (towed) trailer or semi-trailer are 1.7 times higher than the costs in the case of a road train with an active trailer (compared with a road train with an active semi-trailer with a generator operating under program No. 1). The issues of determining the parameters of the generator and on-board energy storage require separate consideration.

The accepted principle of controlling the PID controller in practice will require measuring the value of the longitudinal force on the CD. It seems advisable to switch to the principle of control of the mismatch of angular velocities of the shafts of the internal combustion engine and TED, since the sensor measuring the force is more difficult to manufacture, as it is more difficult to place it on the CD. The principle of control over the mismatch of the angular velocities of the shafts of the internal combustion engine and TED requires further study.

The difference of force on the hook (see Fig. 4) in a road train with an active trailer and with a passive trailer, it is due to the fact that the control action is applied based on the force on the CD.

Since most of the energy consumption is accounted for by trailer electric motors, the energy consumption for the tractor is close to the energy consumption of the tractor when driving without a semi-trailer.

5 CONCLUSIONS

1. A vehicle made according to the concept under consideration will allow for the delivery of long loads of large mass, both in general–purpose roads and in severe road conditions, which is important in the construction of structures (especially bridges) with an integrated approach to the development of territories.
2. Ground transport complexes will reduce the cost of cargo transportation, compared with helicopter delivery, and will require minimal terrain preparation (that is, significantly lower costs for preparatory road work).
3. The use of the developed mathematical models will allow to estimate the energy consumption for the transportation of goods and make the necessary logistical decisions.
4. The reduction in energy consumption also depends on the type of engine, therefore, on a road train with an active trailer, the electric motor turned out to be more efficient than a gasoline generator, which is associated with operating costs.

Thus, all the prerequisites were created to achieve the designated research goal and the possibility of using machines with a hybrid power plant and an electromechanical transmission in the construction industry was shown.

Significant losses during energy conversion are not considered, taking into account the development of electrical engineering.

From the presented calculation results, it can be seen that a road train with an active trailer link has better dynamics (less than the expected deviation from the speeds of this cycle of movement).

6 ACKNOWLEDGMENT

This paper has been supported by the Kazan Federal University Strategic Academic Leadership Program ("PRIORITY-2030").

7 REFERENCES

[1] Zapryagaev, M. M. [et al]. (1970). Army vehicles. Construction and calculation. Part two. Voenizdat, 480 p,

[2] Kochnev E. D. (2011). Secret cars of the Soviet Army. Eksmo, Moscow: Yauza.

[3] Dobretsov, R., Gubachev, M., Naletov, I. and Vasiliev, A. (2018). On the way to a driverless road train: Digital technologies in motion modeling, calculation and design of a road train with a hybrid power plant. IV International Scientific Conference "Convergence of Digital and Physical Worlds: Technological, Economic and Social Challenges" (CC-TESC2018), pp. 1-9

[4] Vasiliev, A., Dobretsov, R. (2022). Energy Consumption of a Hybrid Road Train with a Generator Set. In: Evgrafov, A.N. (eds) Advances in Mechanical Engineering. Lecture Notes in Mechanical Engineering. Springer, Cham., https://doi.org/10.1007/978-3-030-91553-7_21

[5] Ankinovich, G. G., Gorelov, V. A., Chudakov, O. I. (2017). Evaluation of the effect of activation of semi-trailer wheels on traction-dynamic properties of a road train. Izvestiya vuzov. Mechanical engineering, Vol. 1, No 682, URL:https://cyberleninka.ru/article/n/otsenka-vliyaniya-aktivizatsii-koles-polupritsepa-na-tyagovo-dinamicheskie-svoystva-avtopoezda (accessed: 07/14/2023).

[6] Vasiliev, A. I., Gubachev, M. S., Dobretsov, R. Yu. (2018). Estimation of the power of resistance to movement of a trailer of a logging train. Improving the efficiency of the forest complex. Materials of the fourth All-Russian Scientific and Practical conference with international participation, pp. 32-33,

[7] Dobretsov, R. Yu. [et al]. (2016). The choice of a schematic version of the construction of transmissions of military vehicles with a hybrid power plant. Collection of articles of the scientific and practical conference "Development and use of electric transmissions for samples of weapons and military equipment (JSC "VNIITransmash"), The publication of JSC "VNIITransmash", Saint Petersburg, pp. 87-100.

[8] Shegelman, I. R., Skrypnik, V. I., Vasiliev A. S. (2011). Justification of technical solutions for the creation of a high-passable logging road train. TDR, No. 7, pp. 64-66, URL: https://cyberleninka.ru/article/n/obosnovanie-tehnicheskih-resheniy-po-sozdaniyu-vysokoprohodimogo-lesovoznogo-avtopoezda (accessed: 07/14/2023).

[9] Ranjit, P. S., Reddy, M. S., Bhurat, S. S. [et al.]. (2022). Experimental studies of the Pinus Sylvestris oil–based diesel engine with the addition of hydrogen to increase productivity and reduce emissions. FME Transactions, Vol. 50, No. 2, pp. 313-321. DOI 10.5937/fme2201313R.

[10] Shepelev, V., Gritsenko, A., Salimonenko, G. (2021). Control of hydrocarbon emissions when changing the technical condition of the exhaust system of modern cars. FME Transactions, Vol. 49, No. 3, pp. 749-755.DOI 10.5937/fme2103749S.

[11] Gorelov V. A., Padalkin B. V., Chudakov O. I. (2016). Development of an algorithm for power distribution in the transmission of an active saddle road train based on the analysis of power factors in the coupling device, Science and Education. Bauman Moscow State Technical University. Electron. Journal, No. 12, pp. 1-17.

[12] Gorelov V. A., Padalkin B. V., Chudakov O. I. (2017). Mathematical model of rectilinear motion on a deformable support surface of a two-link saddle road train with an active semi-trailer link. Bulletin of the Bauman Moscow State Technical University. Ser. Mechanical Engineering, Vol. 2, No. 113, pp. 121-136. DOI: 10.18698/0236-3941-2017-2-121-138

[13] Dubovik D. A. (2010). The hypothesis of the linear distribution law of the support reactions of wheels of multi-axle wheeled vehicles and the methodology of its experimental substantiation. Bulletin of the Belarusian-Russian University, No. 2, pp. 28-33. URL: https://cyberleninka.ru/article/n/gipoteza-lineynogo-zakona-raspredeleniya-opornyh-reaktsiy-koles-mnogoosnyh-kolesnyh-mashin-i-metodika-ee-eksperimentalnogo (accessed: 07/14/2023).

[14] Chudakov O. I. (2017). Dissertation for the degree of Candidate of Technical Sciences "Development of the law of power distribution between links in the rectilinear movement of a road train based on the analysis of force factors in the coupling device". Moscow, 145 p.

[15] Tarasik, V. P. (2006). Theory of car movement: textbook for universities. BHV-Petersburg, St. Petersburg.

[16] Radjic, D. S. (2021). A mathematical and physical model for solving inventive problems. FME Transactions, Vol. 49, No. 3, pp. 726-733 DOI 10.5937/fme2103726R.

[17] Didikov, R. A. [et al]. (2017). Power distribution control in the transmission of a promising wheeled tractor. Procedia Engineering, Vol. 206, pp. 1735-1740.

Paper submitted: 05.12.2023.

Paper accepted: 25.03.2024.